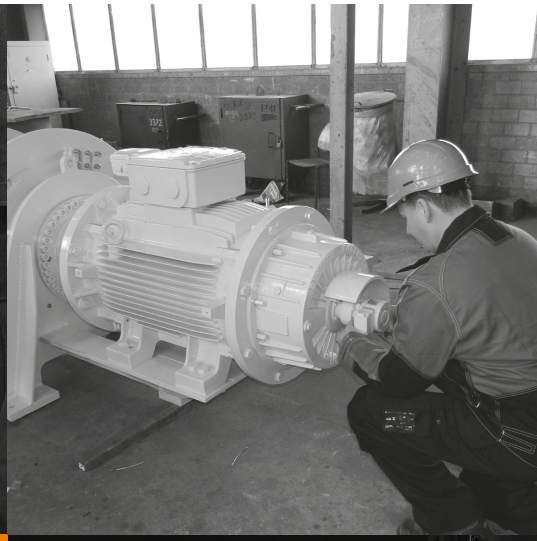

SERVICE & REPAIRS

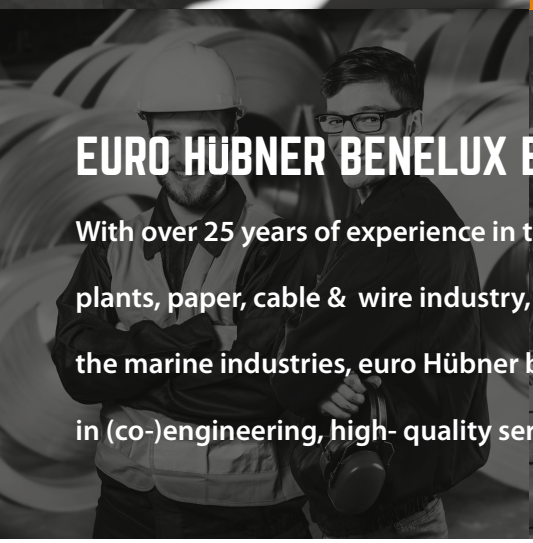
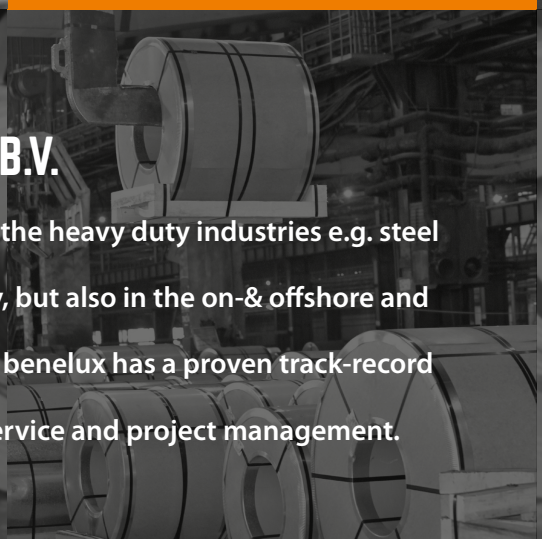

EURO HÜBNER BENELUX B.V.

With over 25 years of experience in the heavy duty industries e.g. steel plants, paper, cable & wire industry, but also in the on-& offshore and the marine industries, euro Hübner benelux has a proven track-record in (co-)engineering, high- quality service and project management.

EURO HÜBNER® BENELUX B.V.

WWW.EURO-HUBNER.NL

SERVICE & REPAIRS

Euro HÜBNER benelux b.v. regularly provides repair and overhaul for various clients, e.g. repairing or replacing defective or worn parts, modifications to installations, complete overhaul and so-called rework.

We use a standard procedure for service and repair and during disassembly of the product, the findings are recorded in a damage report which is the basic for the repair proposal. After approval of the client, the damage is repaired or the components are replaced. A final inspection can be done by the client or an independent certification authority.

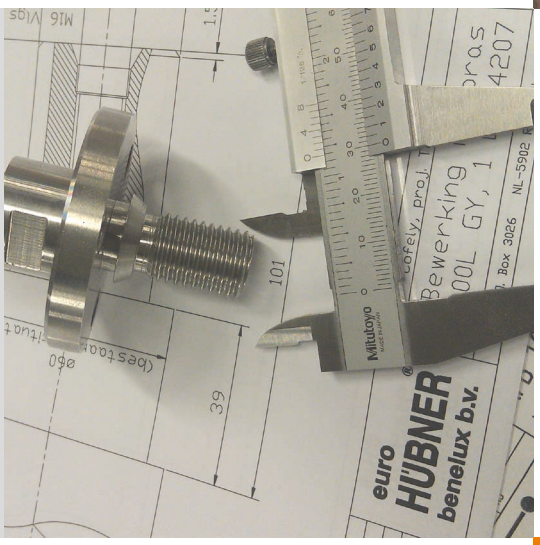

VCA

PBNA

Our service package includes:

- 24/7 available for emergency calls
- Regular product maintenance
- Product repair in our own workshop
- On-site disassembly of products
- Engineering of accessories, add-ons and modifications for customized installation
- Setting up a damage report
- Inspection and certification
- Large stock available
- Customized on-demand stock
- Services, wherever in the world it's needed.

Parlevinkerweg 44
NL-5928 NV Venlo

T +31 (0)475-40 65 06
F +31 (0)475-40 65 09

E service@euro-hubner.nl
I www.euro-hubner.nl

EURO HÜBNER® BENELUX B.V.

member of TransMoTech™ group